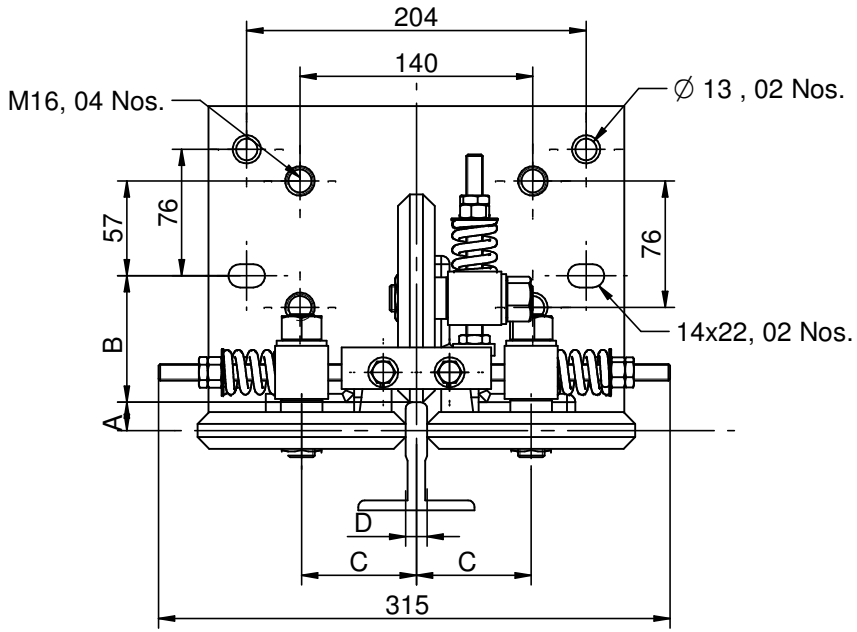

	A	B	C
D = 16	17	76	70.5
D = 10	13	80	67.5
D = 9	13	80	67.5

Rated Speed	V≤2.5 m/s
Rated Load	≤1600 kg
Width of Guide rail	9 mm , 10 mm , 16 mm
Dia . of Wheel	125 mm

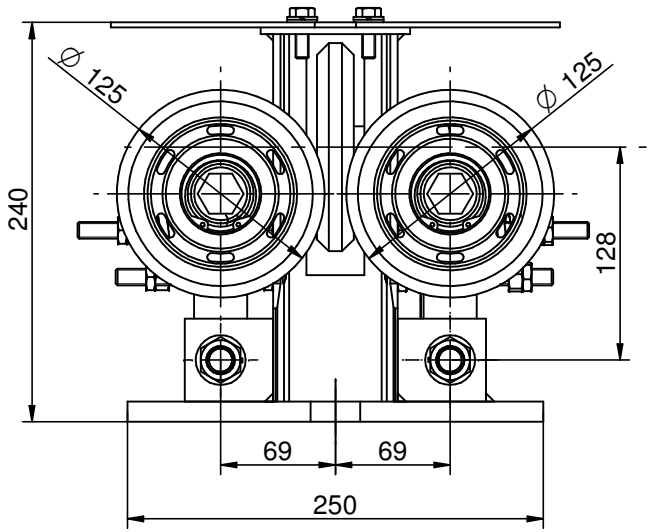

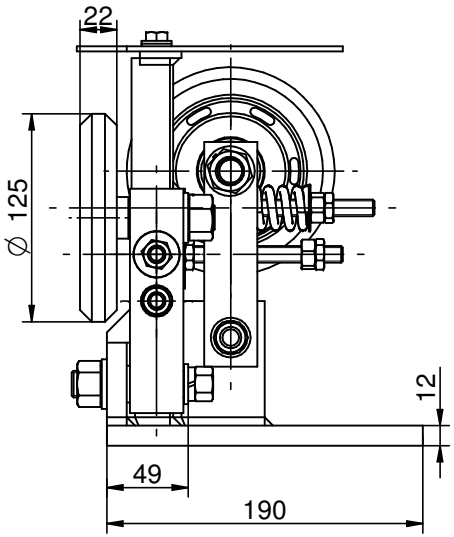

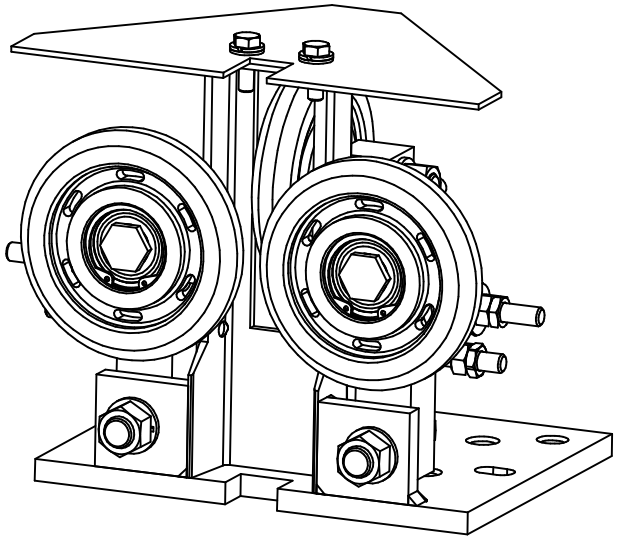

ALL DIMENSION ARE IN MM UNLESS OTHERWISE SPECIFIED.

THE INFORMATION CONTAINED IN THIS DRAWING IS THE ONLY PROPERTY OF SHARP ENGINEERS
ANY REPRODUCTION IN PART OR AS WHOLE WITHOUT THE WRITTEN PERMISSION OF SHARP
ENGINEERS IS PROHIBITED.

REVISION No.	DESCRIPTION	DATE	APPROVED BY	DRWN BY ANKIT PATEL DRWN DATE 14/07/2022	SIZE A4	SCALE	TITLE:- ROLLER GUIDE SHOE G.A.DRAWING	SHARP ENGINEERS